Installation Instructions

ENCL-TC01- _ _ , ENCL-TC02- _ _ , and ENCL-TC03- _ _ Series Thin Client / Small PC Enclosures

IMPORTANT!

FOLLOW THESE INSTRUCTIONS CAREFULLY IN ORDER TO ENSURE PROPER INSTALLATION. FAILURE TO FOLLOW THESE INSTRUCTIONS CORRECTLY COULD RESULT IN DAMAGE TO YOUR PRODUCT.

1. Refer to Figure 1. Mount the enclosure to HIS pedestal using the provided four 1/4-20 bolts. Pre-tapped holes are provided on specific HIS pedestal models. If you will not be using an HIS pedestal, mount the enclosure to a smooth wall surface using the hole pattern shown in Figure 1, or use HIS part number WB-ENCL1-SS4 (not included). If enclosure wiring is not going through the rear hole already provided, punch conduit holes as required.

2. Refer to Figure 2. Remove caps on Cable Routing Trays.

3. Refer to Figure 2. With power disconnected, hook up incoming power from mains supply to the AC input terminal blocks ("L" is black; "N" is white). Securely tighten terminal block screws.

4. Install monitor and other components at this time, following the instructions provided with those devices. Route all cables, including Ethernet and incoming power, at this time.

5. Refer to Figure 2. Hook up AC power to the monitor using an HIS CCAC- _ _ cable (not included). Disconnect and discard the end of the cable with the NA plug. Plug the C-13 connector end of the cable into the power input port on the rear of the monitor. Route the cable in through the hole in the pedestal to the Thin Client / PC enclosure. Connect the Molex connector end of the cable to the AC output connector. Route cables through Cable Routing Trays.

6. Refer to Figure 3. Install the Thin Client or PC onto the enclosure access door by using the provided mounting bracket holes or drilling custom hole locations into the mounting bracket.

   NOTE: The mounting bracket can be adjusted left and right as needed to provide proper clearance for door to close. Pay special attention to clearance between any cable connections and internal enclosure components.

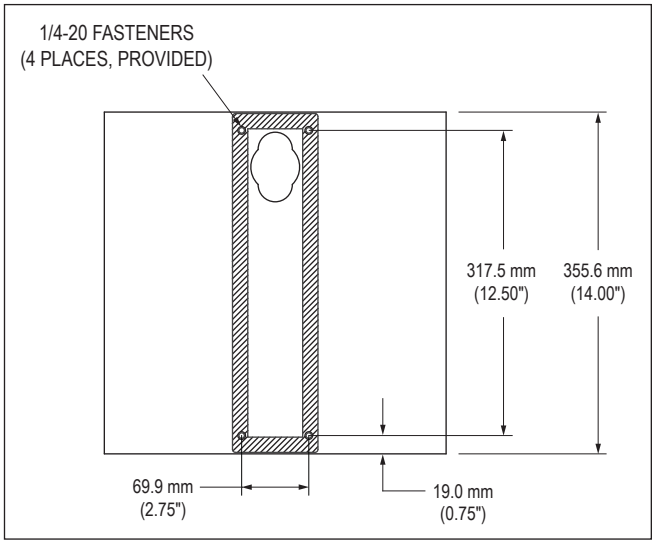

FIGURE 1 – REAR VIEW SHOWING MOUNTING PATTERN

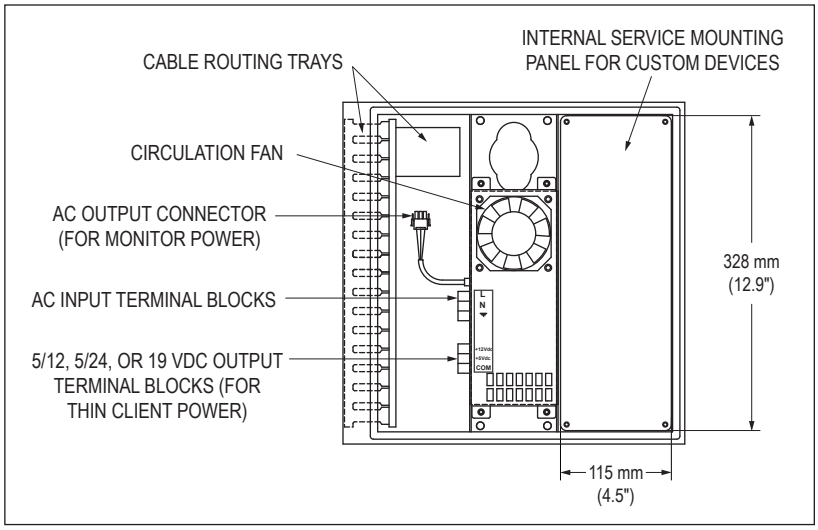

FIGURE 2 – INSIDE VIEW OF ENCLOSURE

7. Hook up all data cables to the Thin Client or PC, routing cables neatly through the Cable Routing Trays.

8. Determine the power requirements for your Thin Client or PC. An industrial air cooled power supply is provided in this Thin Client / PC enclosure and is much more reliable than the power supplies typically provided with Thin Clients or PCs. The internal power supply in ENCL-TC01 enclosures outputs 5/12 VDC (22 W at 5 VDC, 40 W at 12 VDC), while the ENCL-TC02 outputs 5/24 VDC (22 W at 5 VDC, 40 W at 24 VDC), and the ENCL-TC03 outputs 40 W at 19 VDC.

   a. For Thin Clients or PCs with a power requirement other than what is provided, use the device manufacturer's brick power supply. Install the brick power supply to the internal service panel (shown in Figure 2) and connect the AC power side to the AC power input terminal block. After completing the installation, continue to step 13.

   b. For Thin Clients or PCs with a power requirement of 5, 12, 19, or 24 VDC, carefully follow the next steps to connect power to the enclosure's internal power supply.

   IMPORTANT: Determine whether the ground is on the inside or outside of the DC jack. Failure to do this correctly could damage your Thin Client or PC by applying reverse polarity.

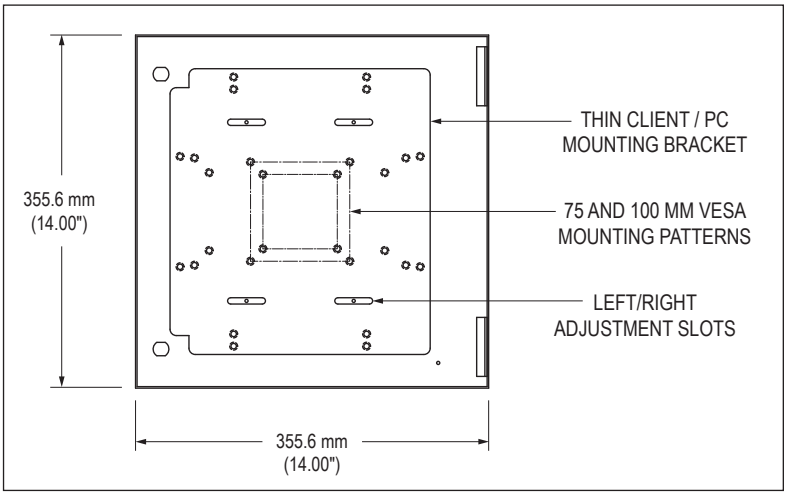

FIGURE 3 – INSIDE VIEW OF ACCESS DOOR

9. Cut the manufacturer's DC power cable between the DC plug and the power brick, ensuring enough length to reach from the DC terminal block to the Thin Client or PC and allow the enclosure access door to open and close.

10. Strip the DC cable wires.

11. Determine which of the bare DC wires is the ground wire by doing a continuity check. Attach a wire label that indicates it to be the ground (or COM) wire.

12. Refer to Figure 2. Hook the DC cable wires to the terminal block in the correct polarity [i.e. ground to COM (–)]. Connect the other wire to the appropriate 5, 12, 19, or 24 VDC terminal.

    NOTE: The DC plug may have a third pin labeled "SENSE" or "SIGNAL." This wire should be connected to the same VDC terminal as the DC (+).

    WARNING: Failure do this correctly could damage your Thin Client or PC.

13. Neatly route all cables through the Cable Trays. Ensure cables allow free swinging of the enclosure access door and will not be caught in the door seal.

    WARNING: Failure to route cables without ensuring they won't get caught in the door seal could cause leakage and damage the cables or other internal components and void your warranty.

14. Install any other hardware on the internal service panel as required.

15. Reinstall the cable routing tray caps that were previously removed in step 2.

16. Power up the Thin Client or PC and test the system before closing and latching the enclosure access door.

    WARNING: Failure to close the enclosure access door may result in water damage to internal components in a wet environment and void your warranty.