Mechanical Drawing – Short-Travel Benchtop Keyboard with Touchpad

Top View

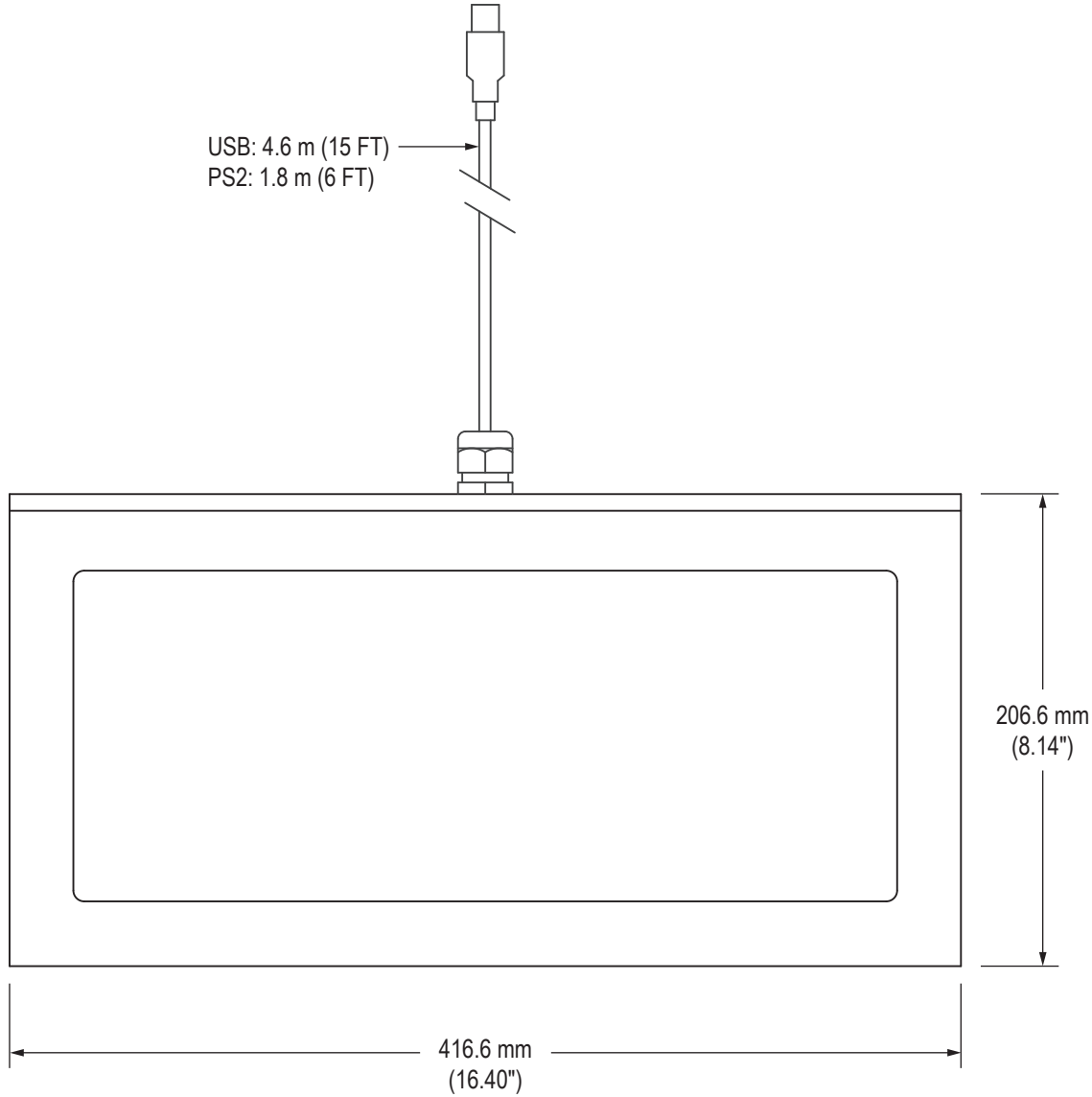

Side View

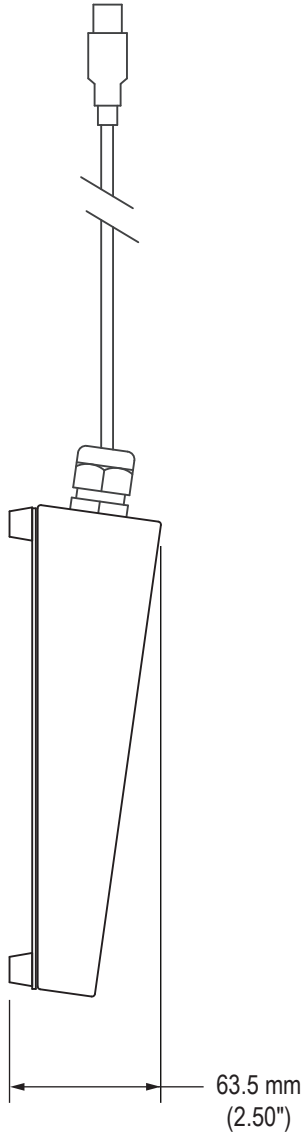

© 2016

Hope Industrial Systems, Inc.
Toll Free: (877) 762-9790 · International: +1 (678) 762-9790
UK: +44 (0) 20 7193 2618 · E-mail: support@HopeIndustrial.com

Part Number: KB-M2-BCH series	Date: 2012.04.16	NOTES:
Revision:	Page 1 of 2	

Mechanical Drawing – Short-Travel Benchtop Keyboard with Touchpad

Detailed Top View Showing Keys

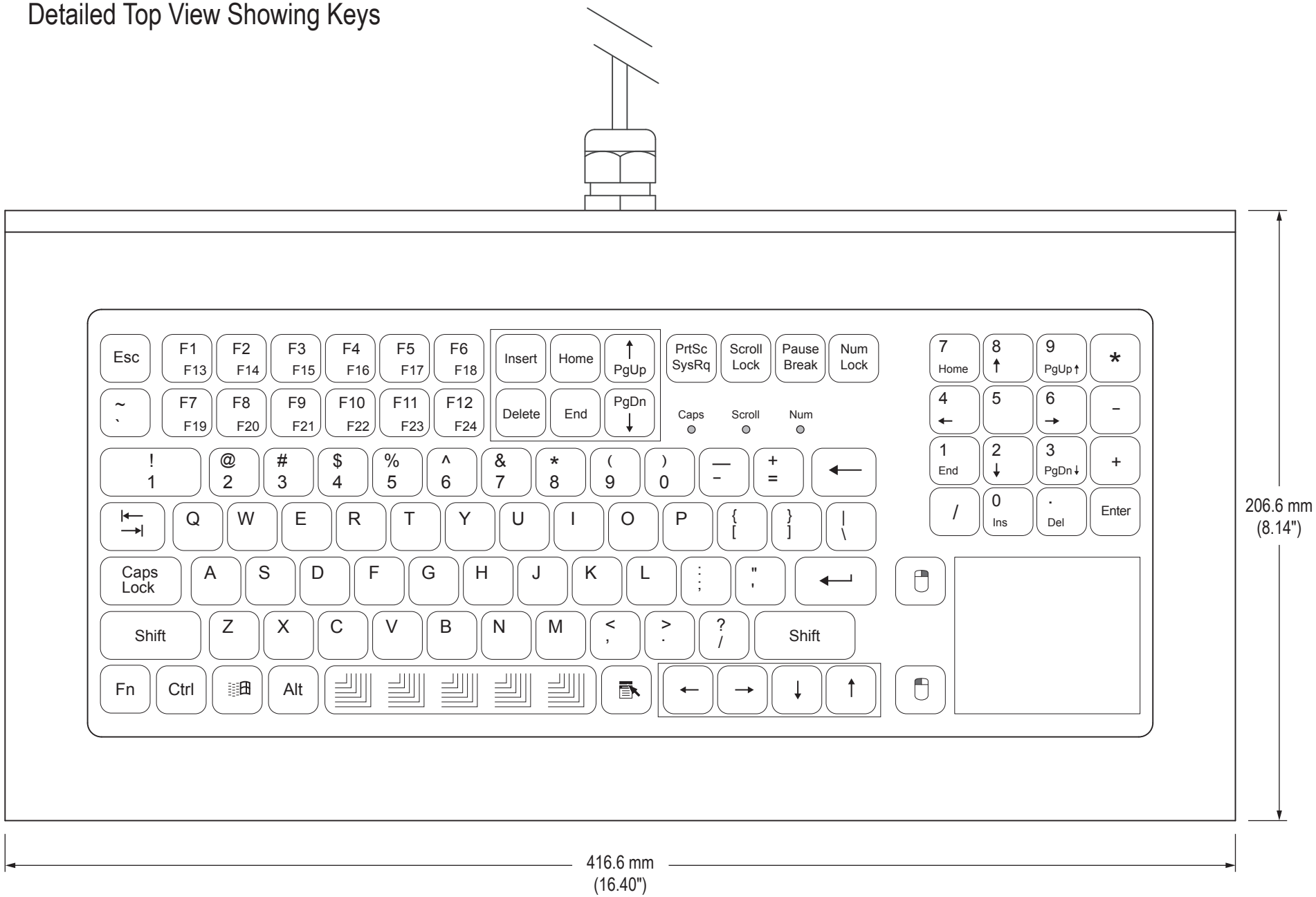

© 2016

Hope Industrial Systems, Inc.
Toll Free: (877) 762-9790 · International: +1 (678) 762-9790
UK: +44 (0) 20 7193 2618 · E-mail: support@HopeIndustrial.com

Part Number: KB-M2-BCH series	Date: 2012.04.16	NOTES:
Revision:	Page 2 of 2	